Accumulator

Explanation of Item Number

① ② - ③ ④④④④ - ⑤⑤⑤ - ⑥ ⑦ ⑧ ⑨⑨⑨

①	APPLICABLE INSPECTION/STANDARD	
H	JAPAN	High Pressure Gas Safety Law (Japan)
F		Industrial Safety and Health Act (Japan)
M	U.S.A.	ASME
S	CANADA	ASME + B51
R	EUROPE	P.E.D. (97/23/EC)
A	AUSTRALIA	AS 1210
N	OTHER	NACOL (Manufacturer's) Inspection

※1 Some models may neither be covered by nor support the standards.

②	BLADDER COMPOUND
N	Standard Nitrile Rubber (NBR)
H	Nitrile Rubber for High Temp. Use (H.NBR)
L	Nitrile Rubber for Low Temp. Use (L.NBR)
F	Butyl Rubber (IIR)
E	Ethylene Propylene Rubber (EPDM)
C	Chloroprene Rubber (CR)
G	Epichlorohydrin Rubber (CHC)
V	Fluorine Rubber (FKM)

MAWP ④④④④
1 7 . 5
2 1 M P
2 3 M P
3 5 M P
4 5 M P
2 1 0 B
3 5 0 B

※2 MAWP: Maximum Allowable Working Pressure
※3 For the accumulator with P.E.D. inspection, the maximum allowable working pressure designated in each item number is in units of bar, not MPa (e.g. 21 MP -> 210 B).

NOMINAL GAS VOLUME ⑤⑤⑤
L L 5
6 . 3
L 1 0
L 1 6

③	SERIES
A	A Series

⑥	SPECIFICATION FOR TOP CAP & GAS CHARGING SIDE
A	Top Cap Standard Dynac Valve (G thread)
Q	SG Valve + Safety Valve + Pressure Gauge ※4
R	SG Valve + Fuse Plug + Pressure Gauge ※4

※4 Q and R cannot be selected for 45MPa.

⑦	SPECIFICATION FOR OIL PORT SIDE
A	Carbon Steel
D	Stainless Steel ※5

※5 When selecting D, please contact us.

⑧	SPECIFICATION OF SHELL	SURFACE TREATMENT	SERVICE FLUID
C	Standard Material (Carbon Steel)	Inside & Outside Surface : Zinc Phosphate Treatment (Standard)	Petroleum Based Hydraulic Oil & Other Fluid
D			Water + Glycol Fluid
A		Inside & Outside Surface : Standard Paint Coating	Petroleum Based Hydraulic Oil & Other Fluid ※6
B		Inside Surface : Standard Paint Coating Outside Surface : Zinc Phosphate Treatment	Petroleum Based Hydraulic Oil & Other Fluid ※6
N		Inside Surface : Zinc Phosphate Treatment Outside Surface : Standard Paint Coating	Petroleum Based Hydraulic Oil & Other Fluid
W			Water + Glycol Fluid
H		Inside & Outside Surface : Standard Plating	Petroleum Based Hydraulic Oil ·Water + Glycol Fluid & Other Fluid

※6 Inner surface coating is unsuitable when using fire resistant fluids that may cause the paint to peel off, such as phosphate ester based fluids and water glycol fluids.

⑨⑨⑨	SPECIAL SPECIFICATION
* * *	For special specifications, the item number designation includes a three-digit number.

Dimensional Drawing

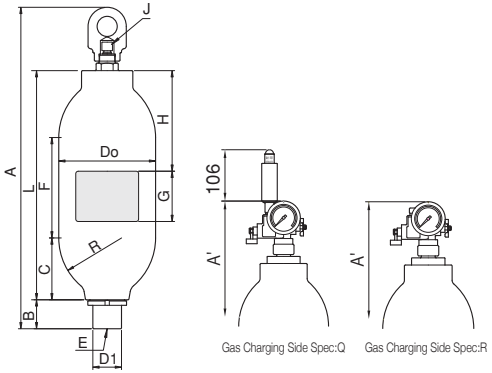

Dimensional Table

Maximum Allowable Working Pressure MPa	Item Number	Nominal Gas Volume L	Mass kg	A +12 0 mm	A' +12 0 mm	L mm			B mm	C mm	F mm	H mm	G mm	φDo±1% mm	φD1 mm	R mm	E	J	Allowable Oil Flow Rate [When Vertically Installed 16~320cSt]	Possible Oil Flow Rate
17.5	① ② - A 1 7 . 5 - L L 5 - ⑥ ⑦ ⑧	5	23	574	581	390			58	123	134	200	90	190.7	57	125	M42x2	G1/4	300L/min	450L/min ※8
	① ② - A 1 7 . 5 - 6 . 3 - ⑥ ⑦ ⑧	6.3	25	647	654	463					207									
	① ② - A 1 7 . 5 - L 1 0 - ⑥ ⑦ ⑧	10	32	822	829	638					382									
	① ② - A 1 7 . 5 - L 1 6 - ⑥ ⑦ ⑧	16	47	1,134	1,141	950					694	250								
21	① ② - A 2 1 M P - L L 5 - ⑥ ⑦ ⑧	5	27	574	581	390					134	200								
	① ② - A 2 1 M P - 6 . 3 - ⑥ ⑦ ⑧	6.3	30	647	654	463					207									
	① ② - A 2 1 M P - L 1 0 - ⑥ ⑦ ⑧	10	39	822	829	638					382									
	① ② - A 2 1 M P - L 1 6 - ⑥ ⑦ ⑧	16	58	1,134	1,141	950					694	250								
23	① ② - A 2 3 M P - L L 5 - ⑥ ⑦ ⑧	5	29	574	581	390					134	200								
	① ② - A 2 3 M P - 6 . 3 - ⑥ ⑦ ⑧	6.3	32	647	654	463					207									
	① ② - A 2 3 M P - L 1 0 - ⑥ ⑦ ⑧	10	41	822	829	638					382									
	① ② - A 2 3 M P - L 1 6 - ⑥ ⑦ ⑧	16	59	1,134	1,141	950					694	250								
35	① ② - A 3 5 M P - L L 5 - ⑥ ⑦ ⑧	5	35	591	598	398			67	131	127	200		216.3		135		G3/8		
	① ② - A 3 5 M P - 6 . 3 - ⑥ ⑦ ⑧	6.3	57	664	671	471					200									
	① ② - A 3 5 M P - L 1 0 - ⑥ ⑦ ⑧	10	74	838	845	645					374									
	① ② - A 3 5 M P - L 1 6 - ⑥ ⑦ ⑧	16	97	1,150	1,157	957					686	250								
45	① ② - A 4 5 M P - L L 5 - ⑥ ⑦ ⑧	5	35	591	—	398					127	200								
	① ② - A 4 5 M P - 6 . 3 - ⑥ ⑦ ⑧	6.3	57	664		471					200									
	① ② - A 4 5 M P - L 1 0 - ⑥ ⑦ ⑧	10	74	838		645					374									
	① ② - A 4 5 M P - L 1 6 - ⑥ ⑦ ⑧	16	97	1,150		957					686	250								

※7 Dimensions without tolerance indication are for reference. Please confirm the dimensions with the actual product.

※8 Maximum oil flow rate available under certain conditions.

Typical Exploded View

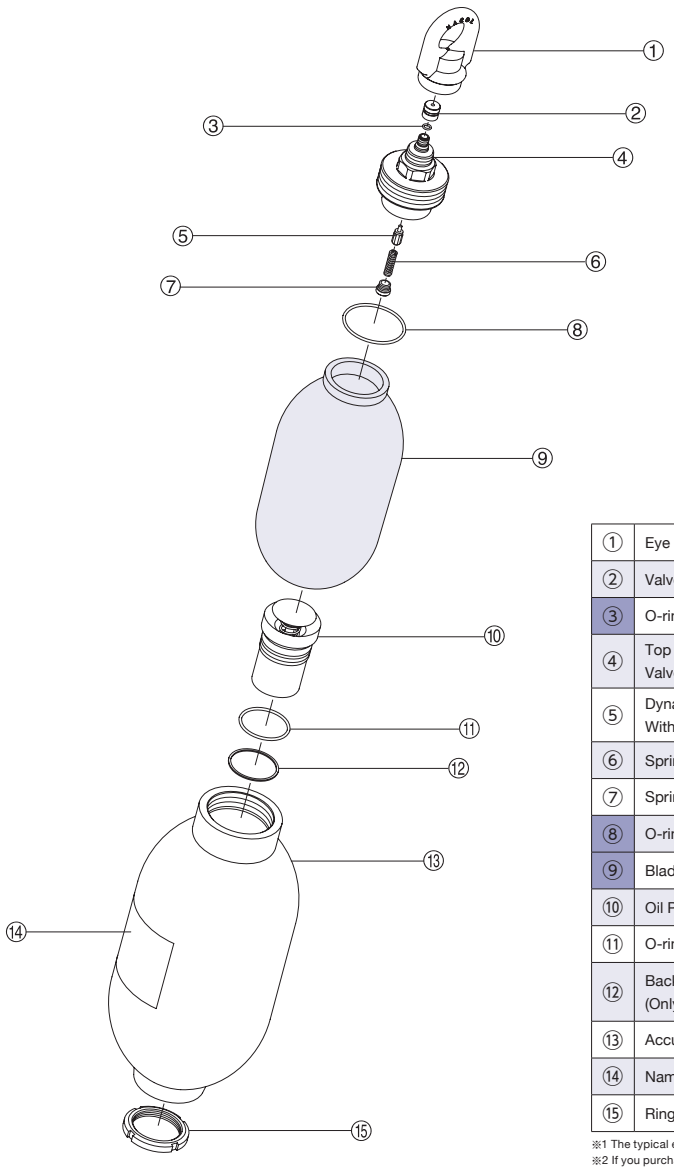

①	Eye Nut
②	Valve Cap
③	O-ring
④	Top Cap With Dynac Valve
⑤	Dynac Valve Packing With Valve Stem
⑥	Spring
⑦	Spring Nut
⑧	O-ring
⑨	Bladder
⑩	Oil Port Valve Assembly
⑪	O-ring
⑫	Back Up Ring (Only for 35MPa or more)
⑬	Accumulator Body
⑭	Nameplate
⑮	Ring Nut

※1 The typical exploded view for this series.
※2 If you purchase ⑨ bladder as the spare parts, ③⑧o-rings will be attached with the bladder.

Piping Connection

Dimensional Drawing

● Bushing

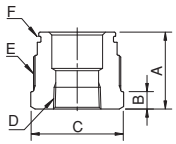

● Flange (with Counter Flange)

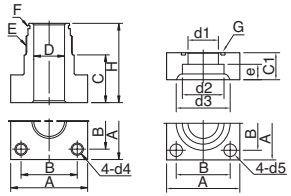

● Valve Flange

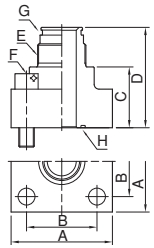

※1 The above shows the shape of representative model. Confirm the actual shape with the drawing or the actual product.
※2 When there is no indication of maximum allowable working pressure of your accumulator in the column of "Applicable ACC. MAWP" of the following dimensional table, please contact us.

Dimensional Table

● Bushing

(mm)

Applicable ACC. MAWP	Item Number	Connection Port Size	A	B	C	D	E	F O-Ring	F B.U. Ring
17.5MPa 21MPa 23MPa	6RCM42R02N23M	Rc1/4	42	12.7	ϕ44 (Width across flat 41)	Rc1/4	M42x2	JIS B2401 P32	—
	6RCM42R03N23M	Rc3/8				Rc3/8			
	6RCM42R04N23M	Rc1/2				Rc1/2			
	6RCM42R06N23M	Rc3/4				Rc3/4			
	6RCM42R08N23M	Rc1	60	30	ϕ50 (Width across flat 46)	Rc1			
	6RCM42R10N23M	Rc1-1/4	70	40	ϕ65 (Width across flat 60)	Rc1-1/4			
35MPa	6RCM42R02N35M	Rc1/4	58	17	ϕ50 (Width across flat 46)	Rc1/4		AS568 218	AS568 218
	6RCM42R03N35M	Rc3/8				Rc3/8			
	6RCM42R04N35M	Rc1/2				Rc1/2			
	6RCM42R06N35M	Rc3/4				Rc3/4			
	6RCM42R08N35M	Rc1	76	35	ϕ60 (Width across flat 55)	Rc1			
	6RCM42R10N35M	Rc1-1/4	81	40	ϕ65 (Width across flat 60)	Rc1-1/4			

● Flange (with Counter Flange)

(mm)

Applicable ACC. MAWP	Item Number	CPS	A	B	C	H	e	ϕD	C1	ϕ d1	ϕ d2	ϕ d3	ϕ d4	ϕ d5	E	F O-Ring	F B.U. Ring	G
17.5MPa 21MPa	6FCM4215AX007	15A	76	56	28	58	11	25	28	16	22.2	32	M12	13	M42x2	JIS B2401 P32	—	G40
	6FCM4220AX006	20A					12			20	27.7	38						
	6FCM4225AX005	25A					14			25	34.5	45						
	6FCM4232AN21M	32A					16			31.5	43.2	56						
	6FCM4240AX013	40A	100	73	36	66	18	47	36	37.5	49.1	63	M16	18				G60
	6FCM4250AN21M	50A					20			47.5	61.1	75						
35MPa	6FCM4215AX015	15A	68	48	36	77	12	16	28	12.3	22.2	37.5	M12	14		AS568 218	AS568 218	G30
	6FCM4220AN35M	20A								16.2	27.7	43.5						
	6FCM4225AX009	25A	92	65	45	86	14	25	36	21	34.5	53	M16	18				G40
	6FCM4232AN35M	32A					18		36	30	43.2	63						
	6FCM4250AN35M	50A	132	92	50	91	25	35	50	35	61.1	84	M20	22				G50

● Valve Flange

(mm)

Applicable ACC. MAWP	Item Number	CPS	A	B	C	D	E	F	G O-Ring	G B.U. Ring	H
17.5MPa 21MPa	6FCM4232DN21M	32A	76	56	51	81	M42x2	M12x45	JIS B2401 P32	—	G40
	6FCM4240DN21M	40A	92	65	36	86		M16x55			G50
	6FCM4250DN21M	50A	100	73		66					G60
35MPa	6FCM4225DN35M	25A	95	65	54	95		M16x60	AS568 218	AS568 218	G30
	6FCM4225DX027	25A	ϕ106	52	110	151		M16x55			G35
	6FCM4232DN35M	32A	100	70	54	95		M16x60			

CPS:Connection Port Size MAWP: Maximum Allowable Working Pressure

Accessories/Tools

Maximum Allowable Working Pressure MPa					17.5	21			23	35	45
Item Number of Accumulator					①②-A17.5-LL5-⑥⑦⑧	①②-A21MP-LL5-⑥⑦⑧			①②-A23MP-LL5-⑥⑦⑧	①②-A35MP-LL5-⑥⑦⑧	①②-A45MP-LL5-⑥⑦⑧
					①②-A17.5-6.3-⑥⑦⑧	①②-A21MP-6.3-⑥⑦⑧			①②-A23MP-6.3-⑥⑦⑧	①②-A35MP-6.3-⑥⑦⑧	①②-A45MP-6.3-⑥⑦⑧
					①②-A17.5-L10-⑥⑦⑧	①②-A21MP-L10-⑥⑦⑧			①②-A23MP-L10-⑥⑦⑧	①②-A35MP-L10-⑥⑦⑧	①②-A45MP-L10-⑥⑦⑧
					①②-A17.5-L16-⑥⑦⑧	①②-A21MP-L16-⑥⑦⑧			①②-A23MP-L16-⑥⑦⑧	①②-A35MP-L16-⑥⑦⑧	①②-A45MP-L16-⑥⑦⑧
Optional Parts	Gas Charging Tools Kit ※1			☞P204	6GG□□□□□□□□				6GG□□□□□□□□	6GH□□□□□□□□	
	For Installation	NACOL Clamp		☞P200	6K190N				6K190N	6K216N	
		NORMA Clamp		☞P201	6081C191				6081C191	6081C215	
		Base Mounting Plate (Exclusively for NACOL Clamp)		☞P199	6BMP190N				6BMP190N		
		Base Mounting Plate (Exclusively for NORMA Clamp)		☞P199	6BMP191				6BMP191		
Bladder Replacement	Parts	Bladder		☞P210	65②A⑤⑤⑤A				65②A⑤⑤⑤A		
		Bladder Back Up Ring			—				—		
	Tools	Cap Wrench		☞P208	— (Please use a commercially available wrench.)				— (Please use a commercially available wrench.)		
Dynac Valve Replacement (DV Spec.)	Parts	Dynac Valve Packing with Valve Stem		☞P212	645026400A				645026400A		
		Spring		☞P212	645045500				645045500		
		Spring Nut		☞P212	645048200				645048200		
	Tools	Spring Nut Key		☞P212	6TWH04				6TWH04		
For Oil Port Valve Assembly	Tools	Ring Nut Wrench		☞P209	6TWD075				6TWD75		
Separately Available Parts	Eye Nut (Hanging Tool)				6HTM32				6HTM32	6HTM42	
	Valve Cover				645049608				645049608	645049705	
	Exclusively for Q/R Spec.	SG Valve		☞P196	6H□-AV35MP-F03-M32A				6H□-AV35MP-F03-M32A	6H□-AV35MP-F03-M42A	—
		Pressure Gauge Containing Glycerol		☞P197	6018DUF0206□□□□G				6018DUF0206□□□□G		—
		Spring Loaded Type Safety Valve		☞P198	6H-SV□□□□-03-F03				6H-SV□□□□-03-F03		—
		Fuse Plug		☞P197	6H-FP35MP-03-F03				6H-FP35MP-03-F03		—

※1 Nitrogen gas charging, inspection, or pressure adjustment requires a gas charging tools kit.
(Only a hose and an adaptor are required for R or Q specification accumulator with SG valve.)

Accumulator

Explanation of Item Number

① ② - ③ ④④④④ - ⑤⑤⑤ - ⑥ ⑦ ⑧ ⑨⑨⑨

①	APPLICABLE INSPECTION/STANDARD	
H	JAPAN	High Pressure Gas Safety Law (Japan)
F		Industrial Safety and Health Act (Japan)
M	U.S.A.	ASME
S	CANADA	ASME + B51
R	EUROPE	P.E.D. (97/23/EC)
A	AUSTRALIA	AS 1210
N	OTHER	NACOL (Manufacturer's) Inspection

※1 Some models may neither be covered by nor support the standards.

②	BLADDER COMPOUND
N	Standard Nitrile Rubber (NBR)
H	Nitrile Rubber for High Temp. Use (H.NBR)
L	Nitrile Rubber for Low Temp. Use (L.NBR)
F	Butyl Rubber (IIR)
E	Ethylene Propylene Rubber (EPDM)
C	Chloroprene Rubber (CR)
G	Epichlorohydrin Rubber (CHC)
V	Fluorine Rubber (FKM)

MAWP ④④④④
1 7 . 5
2 1 M P
2 3 M P
3 5 M P
4 9 . 1
4 9 . 4
2 1 0 B
3 5 0 B

※2 MAWP: Maximum Allowable Working Pressure
※3 For the accumulator with P.E.D. inspection, the maximum allowable working pressure designated in each item number is in units of bar, not MPa (e.g. 21 MP -> 210 B).

NOMINAL GAS VOLUME ⑤⑤⑤
L 2 0
L 3 0
L 4 0
L 5 0
L 6 0

③	SERIES
N	N Series

⑥	SPECIFICATION FOR TOP CAP & GAS CHARGING SIDE
A	Top Cap Standard Dynac Valve (G thread)
D	Top Cap Two Pieces Type (For 49.1/49.4MPa) Dynac Valve (G thread)
Q	SG Valve + Safety Valve + Pressure Gauge ※4
R	SG Valve + Fuse Plug + Pressure Gauge ※4

※4 Q and R cannot be selected for 49.1/49.4MPa.

⑦	SPECIFICATION FOR OIL PORT SIDE
A	Carbon Steel
D	Stainless Steel ※5

※5 When selecting D, please contact us.

⑧	SPECIFICATION OF SHELL	SURFACE TREATMENT	SERVICE FLUID
C	Standard Material (Carbon Steel)	Inside & Outside Surface : Zinc Phosphate Treatment (Standard)	Petroleum Based Hydraulic Oil & Other Fluid
D			Water + Glycol Fluid
A		Inside & Outside Surface : Standard Paint Coating	Petroleum Based Hydraulic Oil & Other Fluid ※6
B		Inside Surface : Standard Paint Coating Outside Surface : Zinc Phosphate Treatment	Petroleum Based Hydraulic Oil & Other Fluid ※6
N		Inside Surface : Zinc Phosphate Treatment Outside Surface : Standard Paint Coating	Petroleum Based Hydraulic Oil & Other Fluid
W			Water + Glycol Fluid
H		Inside & Outside Surface : Standard Plating	Petroleum Based Hydraulic Oil ·Water + Glycol Fluid & Other Fluid

※6 Inner surface coating is unsuitable when using fire resistant fluids that may cause the paint to peel off, such as phosphate ester based fluids and water glycol fluids.

⑨⑨⑨	SPECIAL SPECIFICATION
* * *	For special specifications, the item number designation includes a three-digit number.

Dimensional Drawing

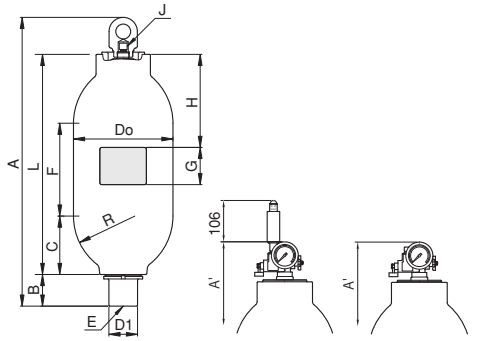

Gas Charging Side Spec:Q Gas Charging Side Spec:R

Dimensional Table

Maximum Allowable Working Pressure MPa	Item Number	Nominal Gas Volume L	Mass kg	A +17 0 mm	A' +17 0 mm	L mm			B mm	C mm	F mm	H mm	G mm	φDo±1% mm	φD1 mm	R mm	E	J	Allowable Oil Flow Rate [When Vertically Installed 16~320cSt]	Possible Oil Flow Rate
17.5	①②-N17.5-L20-⑥⑦⑧	20	75	852	859	668			85	157	326	250	90	267.4	77	160	M60x2	G1/4	600L/min	1,100L/min ※9
	①②-N17.5-L30-⑥⑦⑧	30	97	1,097	1,104	913					571									
	①②-N17.5-L40-⑥⑦⑧	40	123	1,312	1,319	1,128					786	400								
	①②-N17.5-L50-⑥⑦⑧	50	156	1,634	1,641	1,450					1,108	700								
	①②-N17.5-L60-⑥⑦⑧	60	168	1,772	1,779	1,588					1,246									
21	①②-N21MP-L20-⑥⑦⑧	20	85	852	859	668					326	250				165				
	①②-N21MP-L30-⑥⑦⑧	30	112	1,097	1,104	913					571									
	①②-N21MP-L40-⑥⑦⑧	40	140	1,312	1,319	1,128					786	400								
	①②-N21MP-L50-⑥⑦⑧	50	180	1,634	1,641	1,450					1,108	700								
	①②-N21MP-L60-⑥⑦⑧	60	190	1,772	1,779	1,588					1,246									
23	①②-N23MP-L20-⑥⑦⑧	20	90	852	859	668					326	250								
	①②-N23MP-L30-⑥⑦⑧	30	118	1,097	1,104	913					571									
	①②-N23MP-L40-⑥⑦⑧	40	148	1,312	1,319	1,128					786	400								
	①②-N23MP-L50-⑥⑦⑧	50	190	1,634	1,641	1,450					1,108	700								
	①②-N23MP-L60-⑥⑦⑧	60	200	1,772	1,779	1,588					1,246									
35	①②-N35MP-L20-⑥⑦⑧	20	150	865	872	671			95	164	320	250		298.5		200		G3/8		
	①②-N35MP-L30-⑥⑦⑧	30	205	1,100	1,117	916					565									
	①②-N35MP-L40-⑥⑦⑧	40	255	1,325	1,332	1,131					780	400								
	①②-N35MP-L50-⑥⑦⑧	50	330	1,647	1,654	1,453					1,102	700								
	①②-N35MP-L60-⑥⑦⑧	60	355	1,785	1,792	1,591					1,240									
49.4 (49.1) ※8	①②-N49.4-L20-⑥⑦⑧	20	150	865	–	671					320	250								
	①②-N49.4-L30-⑥⑦⑧	30	205	1,100		916					565									
	①②-N49.4-L40-⑥⑦⑧	40	255	1,325		1,131					780	400								
	①②-N49.4-L50-⑥⑦⑧	50	330	1,647		1,453					1,102	700								
	①②-N49.4-L60-⑥⑦⑧	60	355	1,785		1,591					1,240									

※7 Dimensions without tolerance indication are for reference. Please confirm the dimensions with the actual product.
※8 For products certified according to the High Pressure Gas Safety Law, Japan, the maximum allowable working pressure is 49.1 MPa.
※9 Maximum oil flow rate available under certain conditions.

Typical Exploded View

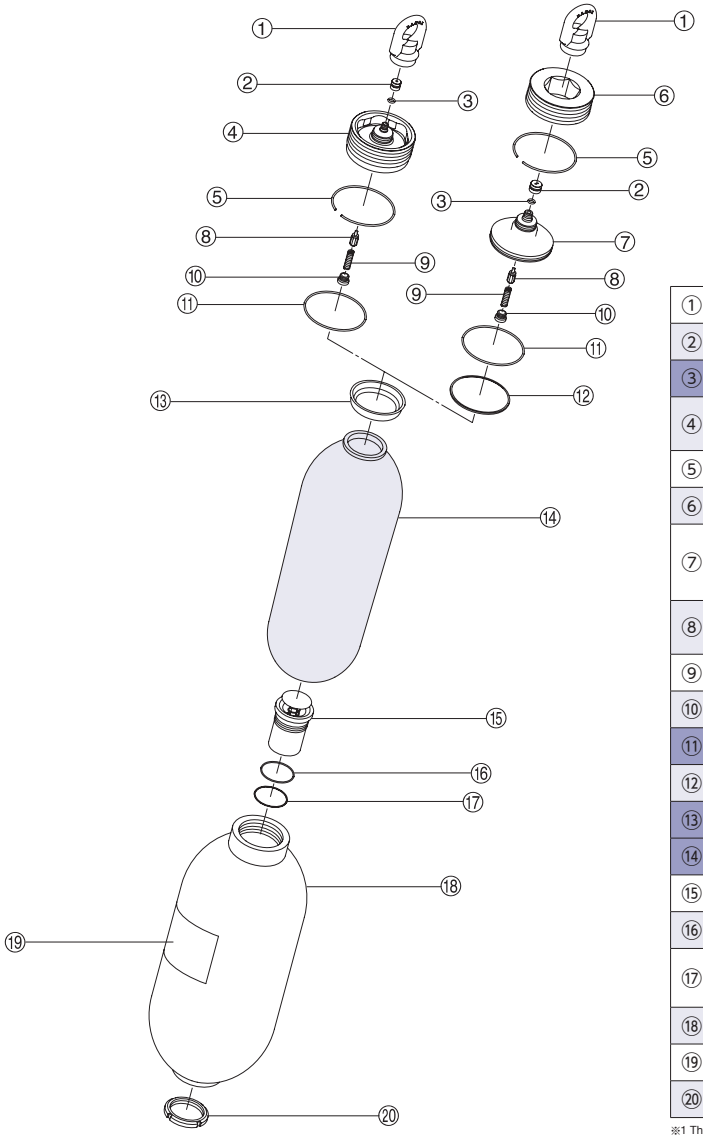

①	Eye Nut
②	Valve Cap
③	O-ring
④	Top Cap With Dynac Valve
⑤	Stop Ring
⑥	Cap Nut
⑦	Top Cap With Dynac Valve (Two Pieces Type)
⑧	Dynac Valve Packing With Valve Stem
⑨	Spring
⑩	Spring Nut
⑪	O-ring
⑫	Bladder Back Up Ring
⑬	Bladder Cap
⑭	Bladder
⑮	Oil Port Valve Assembly
⑯	O-ring
⑰	Back Up Ring (Only for 35MPa or more)
⑱	Accumulator Body
⑲	Nameplate
⑳	Ring Nut

※1 The typical exploded view for this series.
※2 If you purchase ⑭ bladder as the spare parts, ③⑪o-rings and ⑬ bladder cap will be attached with the bladder.

Piping Connection

Dimensional Drawing

Bushing

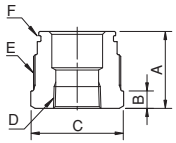

Flange (with Counter Flange)

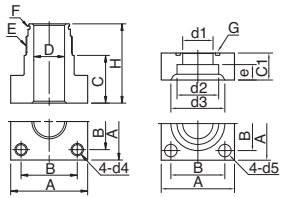

Valve Flange

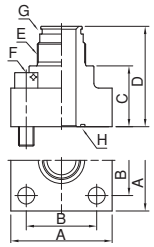

※1 The above shows the shape of representative model. Confirm the actual shape with the drawing or the actual product.
※2 When there is no indication of maximum allowable working pressure of your accumulator in the column of "Applicable ACC. MAWP" of the following dimensional table, please contact us.

Dimensional Table

Bushing

(mm)

Applicable ACC. MAWP	Item Number	Connection Port Size	A	B	C	D	E	F O-Ring	F B.U. Ring
17.5MPa 21MPa 23MPa	6RCM60R02N23M	Rc1/4	53	12	φ64 (Width across flat 60)	Rc1/4	M60x2	JIS B2401 G50	—
	6RCM60R03N23M	Rc3/8				Rc3/8			
	6RCM60R04N23M	Rc1/2				Rc1/2			
	6RCM60R06N23M	Rc3/4				Rc3/4			
	6RCM60R08N23M	Rc1				Rc1			
	6RCM60R10N23M	Rc1-1/4				Rc1-1/4			
	6RCM60R12N23M	Rc1-1/2	77	36	φ85 (Width across flat 80)	Rc1-1/2			
35MPa	6RCM60R02N35M	Rc1/4	73	20	φ75 (Width across flat 70)	Rc1/4		AS568 225	AS568 225
	6RCM60R03N35M	Rc3/8				Rc3/8			
	6RCM60R04N35M	Rc1/2				Rc1/2			
	6RCM60R06N35M	Rc3/4				Rc3/4			
	6RCM60R08N35M	Rc1				Rc1			
	6RCM60R10N35M	Rc1-1/4	85	32		Rc1-1/4			

Flange (with Counter Flange)

(mm)

Applicable ACC. MAWP	Item Number	CPS	A	B	C	H	e	φD	C1	φ d1	φ d2	φ d3	φ d4	φ d5	E	F O-Ring	F B.U. Ring	G
17.5MPa 21MPa	6FCM6015AX009	15A	76	56	28	69	11	30	28	16	22.2	32	M12	13	M60x2	JIS B2401 G50	—	G40
	6FCM6020AX008	20A					12			20	27.7	38						
	6FCM6025AX007	25A					14			25	34.5	45						
	6FCM6032AN21M	32A					16			31.5	43.2	56						
	6FCM6040LX010	40A	100	73	62	103	18	47.5	36	37.5	49.1	63	M16	18				G60
	6FCM6050LN21M	50A					20			47.5	61.1	75						
	6FCM6065AN21M	65A	128	92	45	86	22	60	45	60	77.1	95	M20	22				G75
35MPa	6FCM6015AX014	15A	68	48	36	89	12	16	28	12.3	22.2	37.5	M12	14		AS568 225	AS568 225	G30
	6FCM6020AN35M	20A								16.2	27.7	43.5						
	6FCM6025AX012	25A	92	65	45	98	14	30	36	21	34.5	53	M16	18				G40
	6FCM6032AN35M	32A					18			30	43.2	63						
	6FCM6040AN35M	40A	110	75			20	35	45	35	49.1	70	M18	20				G45
	6FCM6050AN35M	50A	128	90	50	103	25		50	43	61.1	84	M20	22				G55

Valve Flange

(mm)

Applicable ACC. MAWP	Item Number	CPS	A	B	C	D	E	F	G O-Ring	G B.U. Ring	H
17.5MPa 21MPa	6FCM6032DN21M	32A	76	56	83	124	M60x2	M12x45	JIS B2401 G50	—	G40
	6FCM6040DX001	40A	92	65	119	160		M16x55			G50
	6FCM6050KN21M	50A	100	73	62	103					G60
35MPa	6FCM6025DX055	25A	φ106	52	115	168		M16x55	AS568 225	AS568 225	G35
	6FCM6032DN35M	32A	100	70	91	144		M16x60			
	6FCM6040DN35M	40A	105	75	47	100		M16x65			
	6FCM6050DN35M	50A	132	92	60	113		M20x80			G50

CPS:Connection Port Size MAWP: Maximum Allowable Working Pressure

Accessories/Tools

Maximum Allowable Working Pressure MPa					17.5	21			23	35	49.4(49.1)
Item Number of Accumulator					①②-N17.5-L20-⑥⑦⑧	①②-N21MP-L20-⑥⑦⑧			①②-N23MP-L20-⑥⑦⑧	①②-N35MP-L20-⑥⑦⑧	①②-N49.4-L20-⑥⑦⑧
					①②-N17.5-L30-⑥⑦⑧	①②-N21MP-L30-⑥⑦⑧			①②-N23MP-L30-⑥⑦⑧	①②-N35MP-L30-⑥⑦⑧	①②-N49.4-L30-⑥⑦⑧
					①②-N17.5-L40-⑥⑦⑧	①②-N21MP-L40-⑥⑦⑧			①②-N23MP-L40-⑥⑦⑧	①②-N35MP-L40-⑥⑦⑧	①②-N49.4-L40-⑥⑦⑧
					①②-N17.5-L50-⑥⑦⑧	①②-N21MP-L50-⑥⑦⑧			①②-N23MP-L50-⑥⑦⑧	①②-N35MP-L50-⑥⑦⑧	①②-N49.4-L50-⑥⑦⑧
					①②-N17.5-L60-⑥⑦⑧	①②-N21MP-L60-⑥⑦⑧			①②-N23MP-L60-⑥⑦⑧	①②-N35MP-L60-⑥⑦⑧	①②-N49.4-L60-⑥⑦⑧
Optional Parts	Gas Charging Tools Kit ※1			☞P204	6GG□□□□ □□□ □				6GG□□□□ □□□ □	6GH□□□□ □□□ □	
	For Installation	NACOL Clamp		☞P200	6KH267				6KH267	6KH298	
		NORMA Clamp		☞P201	6081C267				6081C267	6081C298	
		Base Mounting Plate (Exclusively for NACOL Clamp)		☞P199							
		Base Mounting Plate (Exclusively for NORMA Clamp)		☞P199	6BMP267				6BMP267		
Bladder Replacement	Parts	Bladder		☞P210	65②N⑤⑤⑤A				65②N⑤⑤⑤A		
		Bladder Back Up Ring			–				–	64008250120	
	Tools	Cap Wrench		☞P208	6TWH81				6TWH81		6TWH63
Dynac Valve Replacement (DV Spec.)	Parts	Dynac Valve Packing with Valve Stem		☞P212	645026400A				645026400A		
		Spring		☞P212	645045500				645045500		
		Spring Nut		☞P212	645048200				645048200		
	Tools	Spring Nut Key		☞P212	6TWH04				6TWH04		
For Oil Port Valve Assembly	Tools	Ring Nut Wrench		☞P209	6TWD105				6TWD105		
Separately Available Parts	Eye Nut (Hanging Tool)				6HTM32				6HTM32	6HTM42	6HTM42H63
	Valve Cover				645049608				645049608	645049705	
	Exclusively for Q/R Spec.	SG Valve		☞P196	6H□-AV35MP-F03-M32A				6H□-AV35MP-F03-M32A	6H□-AV35MP-F03-M42A	–
		Pressure Gauge Containing Glycerol		☞P197	6018DUF0206□□□□G				6018DUF0206□□□□G		–
		Spring Loaded Type Safety Valve		☞P198	6H-SV□□□□-03-F03				6H-SV□□□□-03-F03		–
		Fuse Plug		☞P197	6H-FP35MP-03-F03				6H-FP35MP-03-F03		–

※1 Nitrogen gas charging, inspection, or pressure adjustment requires a gas charging tools kit.
(Only a hose and an adaptor are required for R or Q specification accumulator with SG valve.)

Accumulator

Explanation of Item Number

① □ - □□□□□ - □□□ - □□□ ■■■

①	APPLICABLE INSPECTION/STANDARD	
H	JAPAN	High Pressure Gas Safety Law (Japan)
F	JAPAN	Industrial Safety and Health Act (Japan)
M	U.S.A.	ASME
S	CANADA	ASME + B51
R	EUROPE	P.E.D. (97/23/EC)
A	AUSTRALIA	AS 1210
N	OTHER	NACOL (Manufacturer's) Inspection

※1 Some models may neither be covered by nor support the standards.

②	BLADDER COMPOUND
N	Standard Nitrile Rubber (NBR)
H	Nitrile Rubber for High Temp. Use (H.NBR)
L	Nitrile Rubber for Low Temp. Use (L.NBR)
F	Butyl Rubber (IIR)
E	Ethylene Propylene Rubber (EPDM)
C	Chloroprene Rubber (CR)
G	Epichlorohydrin Rubber (CHC)
V	Fluorine Rubber (FKM)

MAWP ④④④④
1 5 M P
2 1 M P
2 5 M P
2 8 M P
3 3 M P
2 1 0 B
2 5 0 B

NOMINAL GAS VOLUME ⑤⑤⑤
L 8 0
1 2 0

※2 MAWP: Maximum Allowable Working Pressure
※3 For the accumulator with P.E.D. inspection, the maximum allowable working pressure designated in each item number is in units of bar, not MPa (e.g. 21 MP -> 210 B).

③	SERIES
N	N Series

⑥	SPECIFICATION FOR TOP CAP & GAS CHARGING SIDE
A	Top Cap Standard Dynac Valve (G thread)
D	Top Cap Two Pieces Type (only for 25MPa or more) Dynac Valve (G thread)
Q	SG Valve + Safety Valve + Pressure Gauge
R	SG Valve + Fuse Plug + Pressure Gauge

⑦	SPECIFICATION FOR OIL PORT SIDE
A	Carbon Steel
D	Stainless Steel ※4

※4 When selecting D, please contact us.

⑧	SPECIFICATION OF SHELL	SURFACE TREATMENT	SERVICE FLUID
C	Standard Material (Carbon Steel)	Inside & Outside Surface : Zinc Phosphate Treatment (Standard)	Petroleum Based Hydraulic Oil & Other Fluid
D			Water + Glycol Fluid
A		Inside & Outside Surface : Standard Paint Coating	Petroleum Based Hydraulic Oil & Other Fluid ※5
B		Inside Surface : Standard Paint Coating Outside Surface : Zinc Phosphate Treatment	Petroleum Based Hydraulic Oil & Other Fluid ※5
N		Inside Surface : Zinc Phosphate Treatment Outside Surface : Standard Paint Coating	Petroleum Based Hydraulic Oil & Other Fluid
W			Water + Glycol Fluid
H		Inside & Outside Surface : Standard Plating	Petroleum Based Hydraulic Oil ·Water + Glycol Fluid & Other Fluid

※5 Inner surface coating is unsuitable when using fire resistant fluids that may cause the paint to peel off, such as phosphate ester based fluids and water glycol fluids.

⑨⑨⑨	SPECIAL SPECIFICATION
* * *	For special specifications, the item number designation includes a three-digit number.

Dimensional Drawing

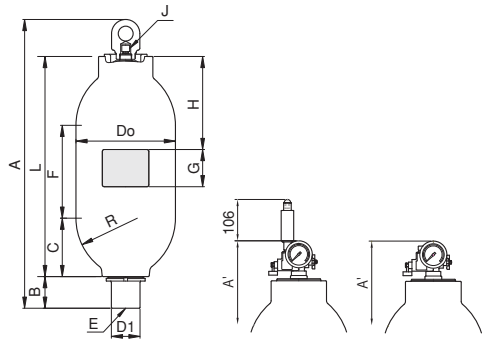

Gas Charging Side Spec:Q Gas Charging Side Spec:R

Dimensional Table

Maximum Allowable Working Pressure MPa	Item Number	Nominal Gas Volume L	Mass kg	A +17 0 mm	A' +17 0 mm	L mm			B mm	C mm	F mm	H mm	G mm	φDo±1% mm	φD1 mm	R mm	E	J	Allowable Oil Flow Rate [When Vertically Installed 16~320cSt]	Possible Oil Flow Rate
15	①②-N15MP-L80-⑥⑦⑧	80	210	1,541	1,547	1,343			99	210	893	400	90	355.6	92.5	210	M75x2	G1/4	900L/min	1,800L/min ※7
	①②-N15MP-120-⑥⑦⑧	120	270	1,993	1,999	1,795					1,345	1,000								
21	①②-N21MP-L80-⑥⑦⑧	80	270	1,541	1,547	1,343					893	400				230				
	①②-N21MP-120-⑥⑦⑧	120	360	1,993	1,999	1,795					1,345	1,000								
25	①②-N25MP-L80-⑥⑦⑧	80	310	1,541	1,547	1,343					893	400						G3/8		
	①②-N25MP-120-⑥⑦⑧	120	410	1,993	1,999	1,795					1,345	1,000								
28	①②-N28MP-L80-⑥⑦⑧	80	270	1,541	1,547	1,343					893	400								
	①②-N28MP-120-⑥⑦⑧	120	360	1,993	1,999	1,795					1,345	1,000								
33	①②-N33MP-L80-⑥⑦⑧	80	310	1,541	1,547	1,343					893	400								
	①②-N33MP-120-⑥⑦⑧	120	410	1,993	1,999	1,795					1,345	1,000								

※6 Dimensions without tolerance indication are for reference. Please confirm the dimensions with the actual product.

※7 Maximum oil flow rate available under certain conditions.

Typical Exploded View

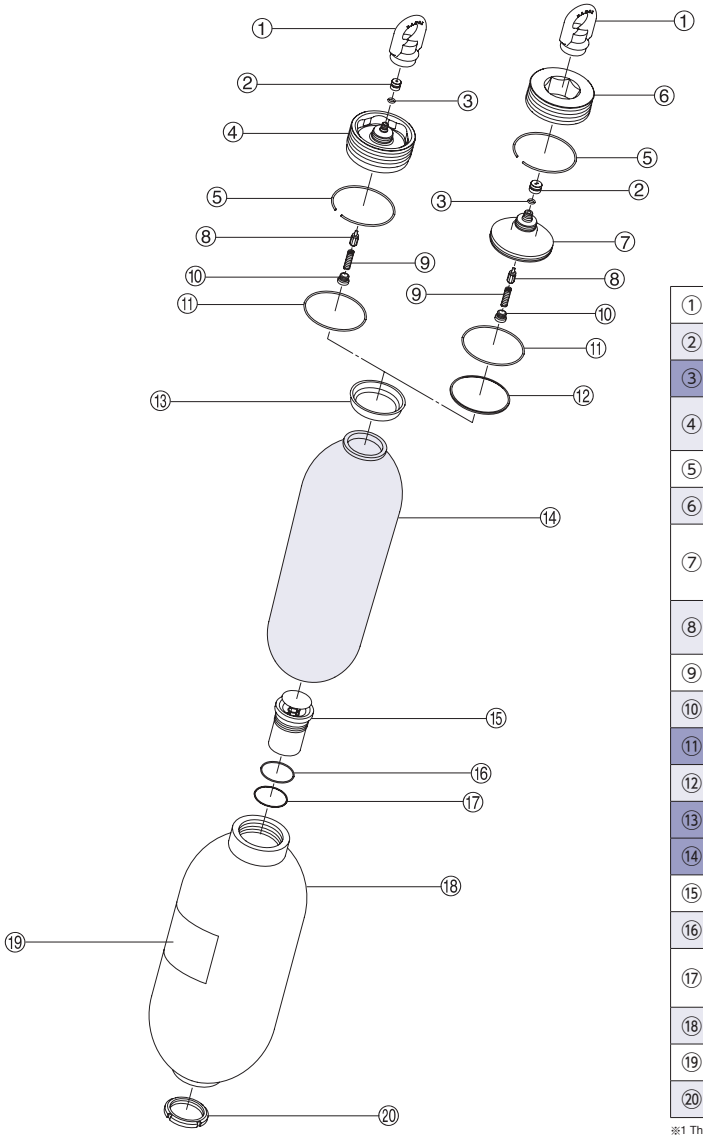

①	Eye Nut
②	Valve Cap
③	O-ring
④	Top Cap With Dynac Valve
⑤	Stop Ring
⑥	Cap Nut
⑦	Top Cap With Dynac Valve (Two Pieces Type)
⑧	Dynac Valve Packing With Valve Stem
⑨	Spring
⑩	Spring Nut
⑪	O-ring
⑫	Bladder Back Up Ring
⑬	Bladder Cap
⑭	Bladder
⑮	Oil Port Valve Assembly
⑯	O-ring
⑰	Back Up Ring (Only for 25MPa or more)
⑱	Accumulator Body
⑲	Nameplate
⑳	Ring Nut

※1 The typical exploded view for this series.
※2 If you purchase ⑭ bladder as the spare parts, ③⑪o-rings and ⑬ bladder cap will be attached with the bladder.

Piping Connection

Dimensional Drawing

Bushing

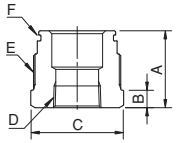

Flange (with Counter Flange)

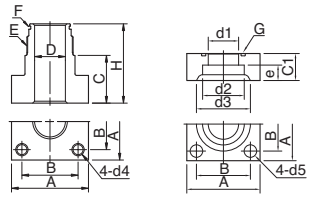

Valve Flange

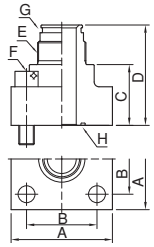

※1 The above shows the shape of representative model. Confirm the actual shape with the drawing or the actual product.
※2 When there is no indication of maximum allowable working pressure of your accumulator in the column of "Applicable ACC. MAWP" of the following dimensional table, please contact us.

Dimensional Table

Bushing

(mm)

Applicable ACC. MAWP	Item Number	Connection Port Size	A	B	C	D	E	F O-Ring	F B.U. Ring
15MPa 21MPa 25MPa	6RCM75R03N25M	Rc3/8	66	20	φ80 (Width across flat 75)	Rc3/8	M75x2	JIS B2401 G65	–
	6RCM75R04N25M	Rc1/2				Rc1/2			
	6RCM75R06N25M	Rc3/4				Rc3/4			
	6RCM75R08N25M	Rc1				Rc1			
	6RCM75R10N25M	Rc1-1/4				Rc1-1/4			
	6RCM75R12N25M	Rc1-1/2				Rc1-1/2			
28MPa 33MPa	6RCM75R03N35M	Rc3/8	68			Rc3/8			JIS B2407 G65
	6RCM75R04N35M	Rc1/2				Rc1/2			
	6RCM75R06N35M	Rc3/4				Rc3/4			
	6RCM75R08N35M	Rc1				Rc1			
	6RCM75R10N35M	Rc1-1/4				Rc1-1/4			

Flange (with Counter Flange)

(mm)

Applicable ACC. MAWP	Item Number	CPS	A	B	C	H	e	φD	C1	φd1	φd2	φd3	φd4	φd5	E	F O-Ring	F B.U. Ring	G
15MPa 21MPa	6FCM7515AX007	15A	100	73	38	84	11	47.5	36	16	22.2	32	M16	18	M75x2	JIS B2401 G65	–	G60
	6FCM7520AX006	20A					12			20	27.7	38						
	6FCM7525AX005	25A					14			25	34.5	45						
	6FCM7532AX004	32A					16			31.5	43.2	56						
	6FCM7540AX003	40A					18			37.5	49.1	63						
	6FCM7550AN21M	50A					20			47.5	61.1	75						
	6FCM7565AN21M	65A	128	92	45	91	22	50	45	60	77.1	95	M20	22				G75
25MPa 28MPa 33MPa	6FCM7532AN35M	32A	92	65	45	93	18	30	36	30	43.2	63	M16	18			JIS B2407 G65	G40
	6FCM7550AN35M	50A	132	92	50	97	25	35	50	35	61.1	84	M20	22				G50

Valve Flange

(mm)

Applicable ACC. MAWP	Item Number	CPS	A	B	C	D	E	F	G O-Ring	G B.U. Ring	H
15MPa 21MPa	6FCM7532DN21M	32A	76	56	92	138	M75x2	M12x45	JIS B2401 G65	–	G40
	6FCM7540DX013	40A	92	65	122	168		M16x60			G50
	6FCM7550DN21M	50A	100	73	91	137		M16x55			G60
	6FCM7565DN21M	65A	128	92	64	110		M20x80			G75
25MPa 28MPa 33MPa	6FCM7525DX030	25A	φ106	52	125	173		M16x55		JIS B2407 G65	G35
	6FCM7550DN35M	50A	132	92	67	115		M20x80			G50

CPS:Connection Port Size MAWP: Maximum Allowable Working Pressure

Accessories/Tools

Maximum Allowable Working Pressure MPa					15	21			25	28	33
Item Number of Accumulator					①②-N15MP-L80-⑥⑦⑧	①②-N21MP-L80-⑥⑦⑧			①②-N25MP-L80-⑥⑦⑧	①②-N28MP-L80-⑥⑦⑧	①②-N33MP-L80-⑥⑦⑧
					①②-N15MP-120-⑥⑦⑧	①②-N21MP-120-⑥⑦⑧			①②-N25MP-120-⑥⑦⑧	①②-N28MP-120-⑥⑦⑧	①②-N33MP-120-⑥⑦⑧
Optional Parts	Gas Charging Tools Kit ※1			☞P204	6GG□□□□ □□□ □				6GH□□□□ □□□ □		
	For Installation	NACOL Clamp		☞P200	6KH355				6KH355		
		NORMA Clamp		☞P201	6081C350				6081C350		
		Base Mounting Plate (Exclusively for NACOL Clamp)		☞P199	—				—		
		Base Mounting Plate (Exclusively for NORMA Clamp)		☞P199	—				—		
Bladder Replacement	Parts	Bladder		☞P210	65②N⑤⑤⑤A				65②N⑤⑤⑤A		
		Bladder Back Up Ring			—				640082501120		
	Tools	Cap Wrench		☞P208	6TWH100				6TWH63		
Dynac Valve Replacement (DV Spec.)	Parts	Dynac Valve Packing with Valve Stem		☞P212	645026400A				645026400A		
		Spring		☞P212	645045500				645045500		
		Spring Nut		☞P212	645048200				645048200		
	Tools	Spring Nut Key		☞P212	6TWH04				6TWH04		
For Oil Port Valve Assembly	Tools	Ring Nut Wrench		☞P209	6TWD120				6TWD120		
Separately Available Parts	Eye Nut (Hanging Tool)				6HTM42				6HTM42H63		
	Valve Cover				645049705				645049705		
	Exclusively for Q/R Spec.	SG Valve		☞P196	6H□-AV35MP-F03-M42A				6H□-AV35MP-F03-M42A		
		Pressure Gauge Containing Glycerol		☞P197	6018DUF0206□□□□G				6018DUF0206□□□□G		
		Spring Loaded Type Safety Valve		☞P198	6H-SV□□□□-03-F03				6H-SV□□□□-03-F03		
		Fuse Plug		☞P197	6H-FP35MP-03-F03				6H-FP35MP-03-F03		

※1 Nitrogen gas charging, inspection, or pressure adjustment requires a gas charging tools kit.
(Only a hose and an adaptor are required for R or Q specification accumulator with SG valve.)